CDX-4270R

SERVICE MANUAL

AEP Model
UK Model



Model Name Using Similar Mechanism	CDX-4180R
CD Drive Mechanism Type	MG-363X-121
Optical Pick-up Name	KSS-521A

SPECIFICATIONS

CD player section

System	Compact disc digital audio system
Signal-to-noise ratio	90 dB
Frequency response	10 – 20,000 Hz
Wow and flutter	Below measurable limit

Tuner section

FM

Tuning range	87.5 – 108.0 MHz
Aerial terminal	External aerial connector
Intermediate frequency	10.7 MHz
Usable sensitivity	12 dBf
Selectivity	75 dB at 400 kHz
Signal-to-noise ratio	65 dB (stereo), 68 dB (mono)
Harmonic distortion at 1 kHz	0.8% (stereo), 0.6% (mono)
Separation	35 dB at 1 kHz
Frequency response	30 – 15,000 Hz

MW/LW

Tuning range	MW: 531 – 1,602 kHz LW: 153 – 281 kHz
Aerial terminal	External aerial connector
Intermediate frequency	10.7 MHz / 450 kHz
Sensitivity	MW: 30 µV LW: 50 µV

Power amplifier section

Outputs	Speaker outputs (sure seal connectors)
Speaker impedance	4 – 8 ohms
Maximum power output	40 W × 4 (at 4 ohms)

General

Outputs	Line output (1) Power aerial relay control lead Power amplifier control lead Telephone ATT control lead
Tone controls	Bass ±8 dB at 100 Hz Treble ±8 dB at 10 kHz
Power requirements	12 V DC car battery (negative ground)
Dimensions	Approx. 178 × 50 × 185 mm (w/h/d)
Mounting dimension	Approx. 182 × 53 × 162 mm (w/h/d)
Mass	Approx. 1.2 kg
Supplied accessories	Parts for installation and connections (1 set) Front panel case (1)

Design and specifications are subject to change without notice.

FM/MW/LW COMPACT DISC PLAYER

MICROFILM

SONY®

SECTION 4
DIAGRAMS

4-1. IC PIN DESCRIPTION

• IC801 MB90574APMT-G-212-BND (SYSTEM CONTROL)

Pin No.	Pin Name	I/O	Pin Description
1	$\overline{\text{LD ON}}$	O	Laser ON/OFF control output
2	FOK	I	Focus OK signal detection input
3	XLAT25	O	CD signal processing latch output
4	DATA25	O	CD signal serial data output
5	$\overline{\text{XRST}}$	O	Reset output to CD signal processor IC.
6	GFS	I	GFS signal detection input
7	NIL	—	Not used. (Connect to ground in this set.)
8	VCC	—	Power supply pin (+5 V)
9 – 11	NIL	—	Not used. (Open)
12	FLS SI/$\overline{\text{NOSE1}}$	I	Front panel attachment detection input
13	LCD SO/FLS SO	O	LCD serial data output
14	LCD CKO	O	LCD serial clock output
15	BEEP	O	BEEP output
16	NIL	—	Not used. (Open)
17	SQ SI	I	Sub Q data input
18	NIL	—	Not used. (Connect to ground in this set.)
19	SQ CKO	O	Sub Q read clock output
20	UNI SI	I	SONY BUS system serial interface input
21	UNI SO	O	SONY BUS system serial interface output
22	UNI CK	I/O	SONY BUS system serial clock input/output
23	C IN	I	Track jump No. count input
24	SIRCS	I	Remote commander input
25	TXT SI	I	CD-TEXT data input (Not used in this set.)
26	NIL	—	Not used. (Connect to ground in this set.)
27	TXT CKO	O	CD-TEXT data read clock output (Not used in this set.)
28	CLOK25	O	CD signal processing serial clock output
29	$\overline{\text{SYSRST}}$	O	System reset output
30	DEEMPH	O	De-emphasis output
31	$\overline{\text{AMP ATT}}$	O	Power amplifier attenuator control output
32	MD ON	O	CD mechanism power control output
33	VSS	—	Ground
34	C	—	Power stabilization capacitor pin
35	CD ON	O	CD power control output
36	$\overline{\text{BUS ON}}$	O	BUS ON control output (Not used in this set.)
37	NIL	O	Power control output of A/D conversion.
38	DVCC	—	VREF input of D/A converter.
39	DVSS	—	Ground of D/A converter.
40	NIL	—	Not used. (Open)
41	ANGLE	O	LCD view angle alignment output (Not used in this set.)
42	AVCC	—	Analog power supply pin (+5 V)
43	AVRH	—	VREF + input of A/D converter.
44	AVRL	—	VREF – input of A/D converter.
45	AVSS	—	Analog ground
46 – 48	KEY IN0 – 2	I	Key input 0 – 2
49	RC IN0	I	Rotary commander input 0
50	QUALITY	I	Noise detection input
51	NIL	—	Not used. (Connect to ground in this set.)
52	MPDH	I	Tuner multi path input
53	S-METER	I	S-meter voltage detection input
54	VCC	—	Power supply pin (+5 V)
55	NS MASK	O	Noise detection output

Pin No.	Pin Name	I/O	Pin Description
56	AMP ON	O	Power amplifier power control output
57	TXT ON	O	Reset output to CD-TEXT decoder IC. (Not used in this set.)
58	$\overline{\text{VOL ATT}}$	O	Electric volume mute control output
59	NIL	—	Not used. (Open)
60	ATT	O	System attenuate control output
61	$\overline{\text{RC IN1}}$	I	Rotary commander shift key input 1
62	TU ATT	O	Tuner attenuate output
63	VSS	—	Ground
64	NIL	—	Not used. (Open)
65	SSTOP	I	IF counter result signal detection input of PLL.
66	$\overline{\text{TEST}}$	I	Test mode initial setting detection input
67	DAVN	I	RDS IC data acquisition detection input
68	FM ON/$\overline{\text{AM ON}}$	O	FM ON output
69	TU ON	O	Tuner power control output
70	SDA	I/O	I²C BUS serial data input/output
71	SCL	O	I²C BUS serial clock output
72	$\overline{\text{NOSE2}}$	I	Front panel OPEN detection input
73	X1A	O	Sub ceramic oscillator output (32 kHz)
74	X0A	I	Sub ceramic oscillator input (32 kHz)
75	SCOR	I	SCOR signal detection input
76	BU IN	I	Backup power detection input
77	DQSY	I	CD-TEXT data setting completion signal detection input (Not used in this set.)
78	CD SENS	I	CD SENS signal detection input
79	NIL	I	Key input acknowledge
80	TEL ATT	I	Telephone attenuate detection input
81	ST/MONO	I/O	Tuner stereo signal detection input/forced monaural output
82	$\overline{\text{SEEKOUT}}$	O	SEEK output
83	SD IN	I	Signal detector input
84	WIDE	O	WIDE select output (Not used in this set.)
85	NARROW	O	NARROW select output (Not used in this set.)
86	HSTX	—	Hardware standby input (Connect to pin ⑨⓪ ($\overline{\text{RESET}}$).)
87	MD2	—	Operation mode input (Connect to ground in this set.)
88, 89	MD1, 0	—	Operation mode input (Connect to VCC in this set.)
90	$\overline{\text{RESET}}$	I	Reset input
91	VSS	—	Ground
92	X0	I	Main ceramic oscillator input (3.68 MHz)
93	X1	O	Main ceramic oscillator output (3.68 MHz)
94	VCC	—	Power supply pin (+5 V)
95	COM8V ON	O	COM 8V control output
96	NIL	—	Not used. (Open)
97	AREA1	I	Destination select input 1 (Fixed at “H” in this set.)
98	AREA2	I	Destination select input 2 (Fixed at “L” (AEP, UK model) or “H” (German model) in this set.)
99	LOUD	I	Fixed at “H” in this set.
100	BAND	I	Fixed at “H” in this set.
101	$\overline{\text{ACC IN}}$	I	Accessory power detection input
102, 103	PH3, 2	I	Disc insertion detection photo sensor input (Fixed at “H” in this set.)
104	LCD CE	O	LCD chip enable output
105	$\overline{\text{FLS W}}$	I	Flash write input (Fixed at “H” in this set.)
106, 107	RE IN0, 1	I	Rotary encoder input
108	ILL ON	O	Illumination power control output
109	PW ON	O	System power control output
110	NIL	—	Not used. (Open)

Pin No.	Pin Name	I/O	Pin Description
111	ANT REM	O	ANT REMOTE power control output
112	NIL	—	Not used. (Open)
113	CTL2	—	Not used in this set.
114	CD LD	O	Loading motor control output (Loading direction)
115	CD EJ	O	Loading motor control output (Eject direction)
116	$\overline{\text{L SW}}$	I	Sled limit switch detection input
117	$\overline{\text{IN SW}}$/(PH1)	I	Disc insertion detection input
118	$\overline{\text{D SW}}$	I	DOWN switch detection input
119	VSS	—	Ground
120	$\overline{\text{SELF SW}}$/(IN SW)	I	Disc self store detection input

21

4-7. SCHEMATIC DIAGRAM — CD MECHANISM SECTION —

• Refer to page 25 for Waveforms.
• Refer to page 35 for IC Block Diagrams.

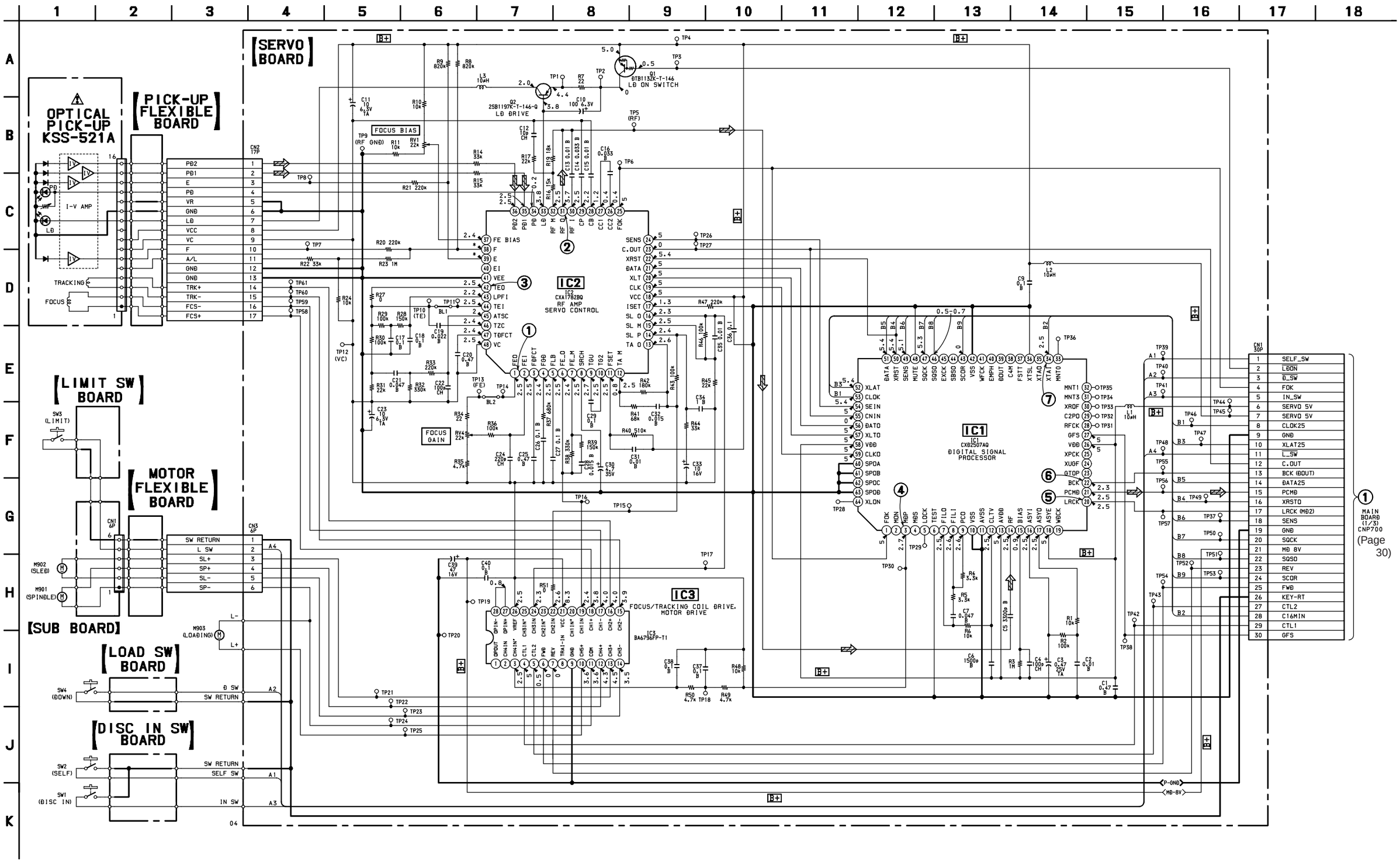

Note:

- Voltage and waveforms are dc with respect to ground under no-signal conditions.
  no mark : CD PLAY
  ∗ : Impossible to measure

4-9. SCHEMATIC DIAGRAM — MAIN SECTION (1/3) — • Refer to page 37 for IC Block Diagrams.

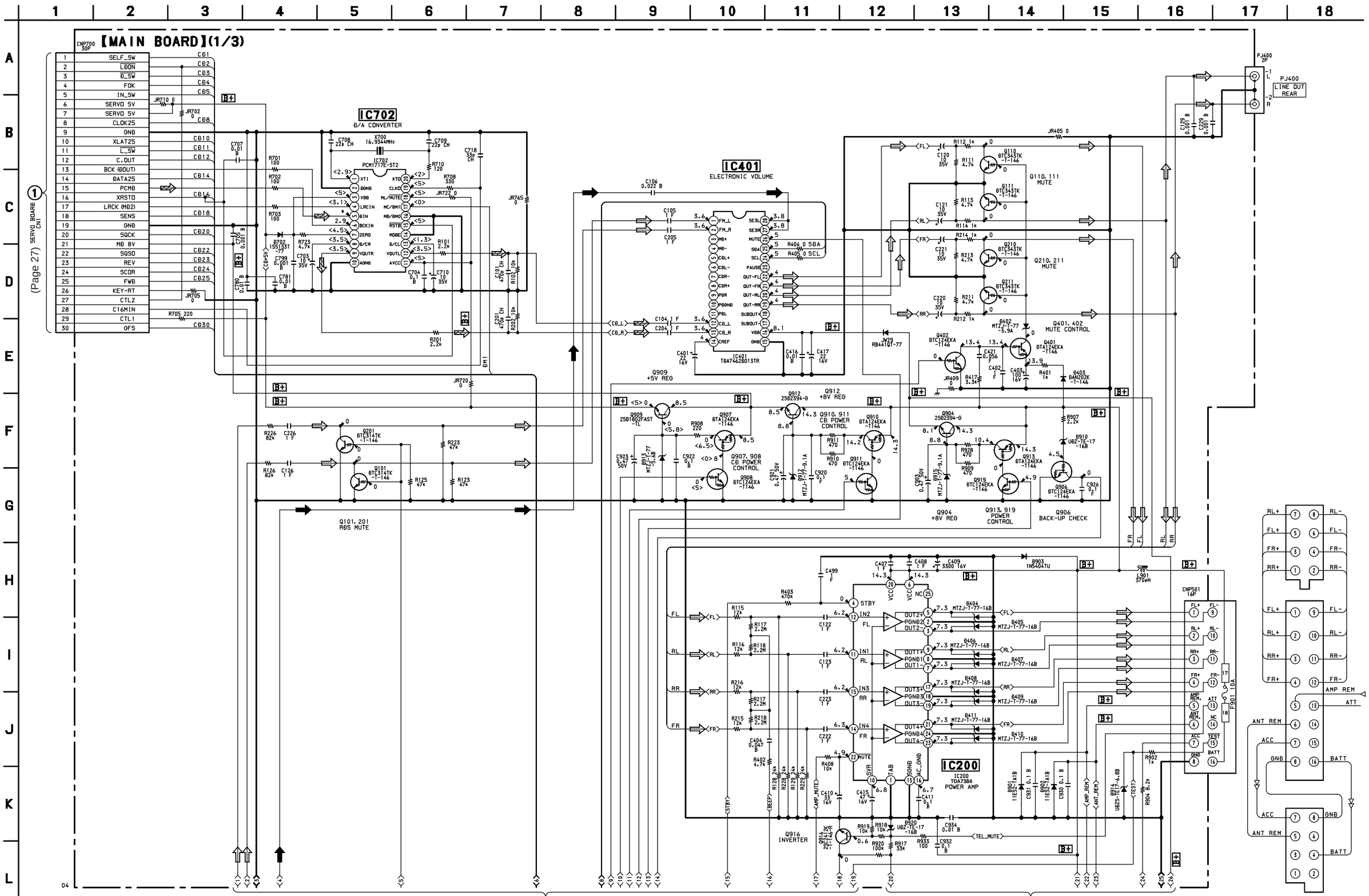

Note:

- Voltage is dc with respect to ground under no-signal (detuned) condition.
  no mark : FM
  ( ) : MW
  < > : CD PLAY

4-10. SCHEMATIC DIAGRAM — MAIN SECTION (2/3) — • Refer to page 38 for IC Block Diagrams.

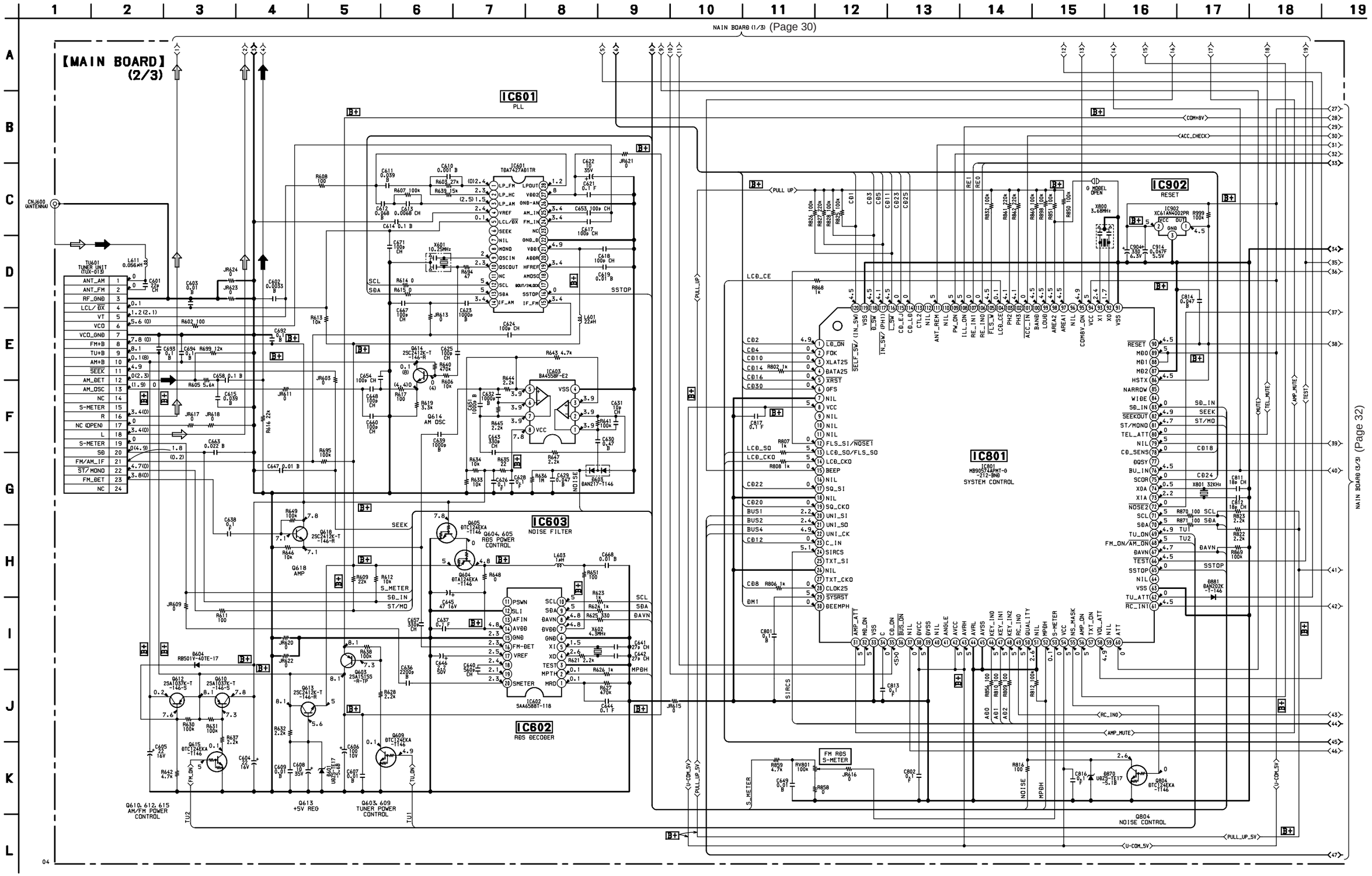

Note:

- Voltage is dc with respect to ground under no-signal (detuned) condition.
  no mark : FM
  ( ) : MW
  < > : CD PLAY

4-11. SCHEMATIC DIAGRAM — MAIN SECTION (3/3) — • Refer to page 38 for IC Block Diagrams.

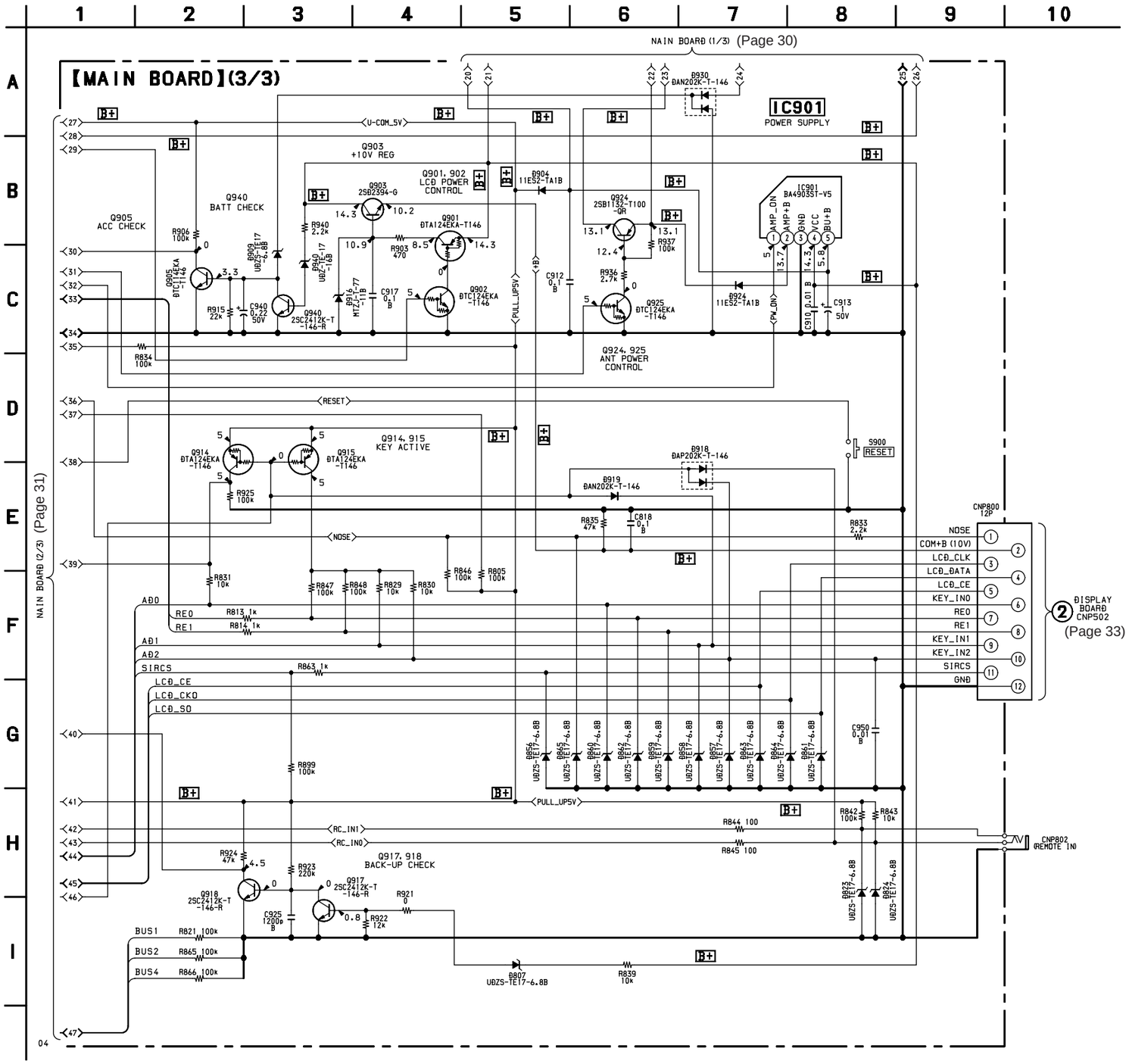

Note:

- Voltage is dc with respect to ground under no-signal (detuned) condition.
  no mark : FM
  ( ) : MW
  < > : CD PLAY

4-12. SCHEMATIC DIAGRAM — DISPLAY SECTION —

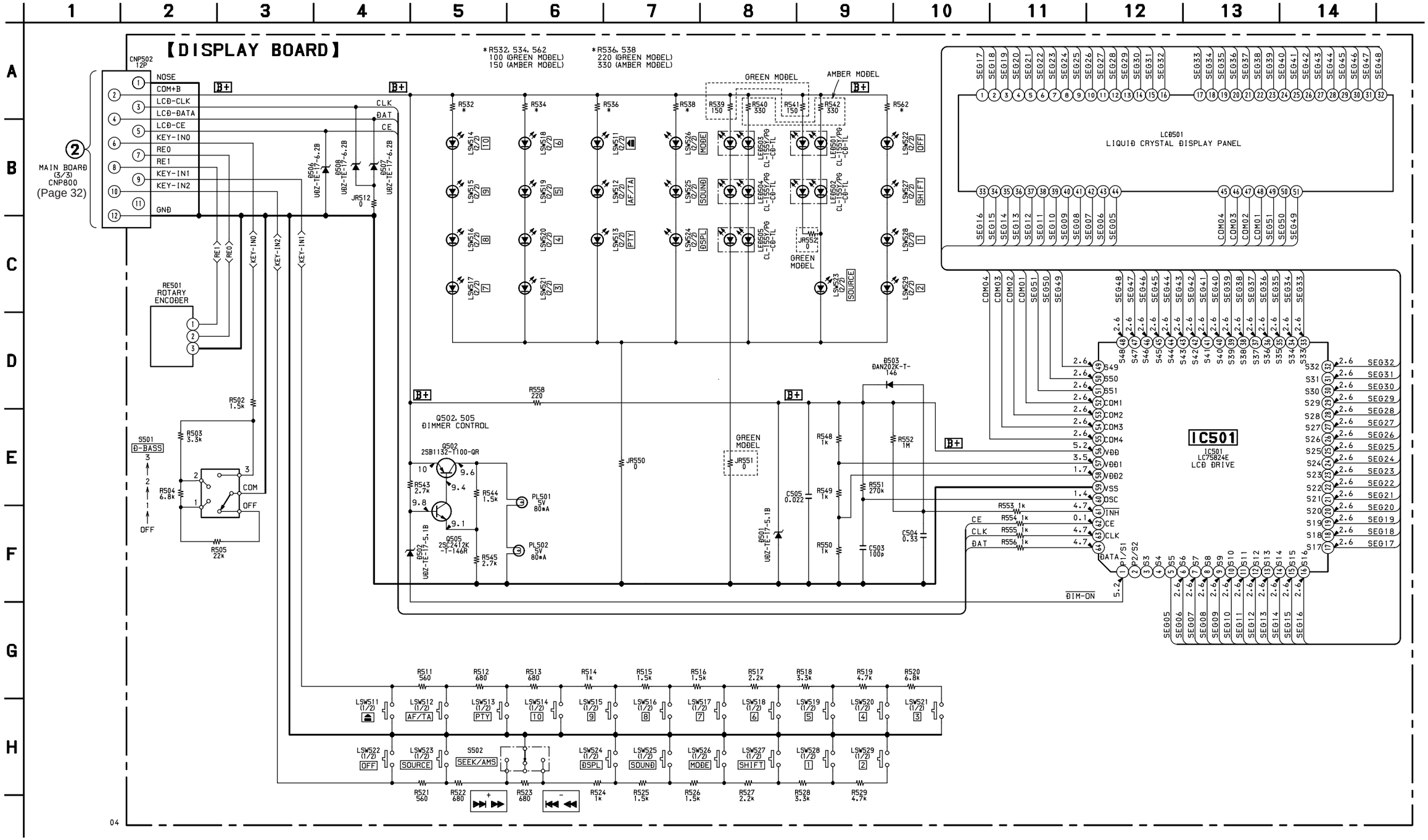

Note:

- Voltage is dc with respect to ground under no-signal (detuned) condition.
  no mark : FM

• IC Block Diagrams

IC1 CXD2507AQ

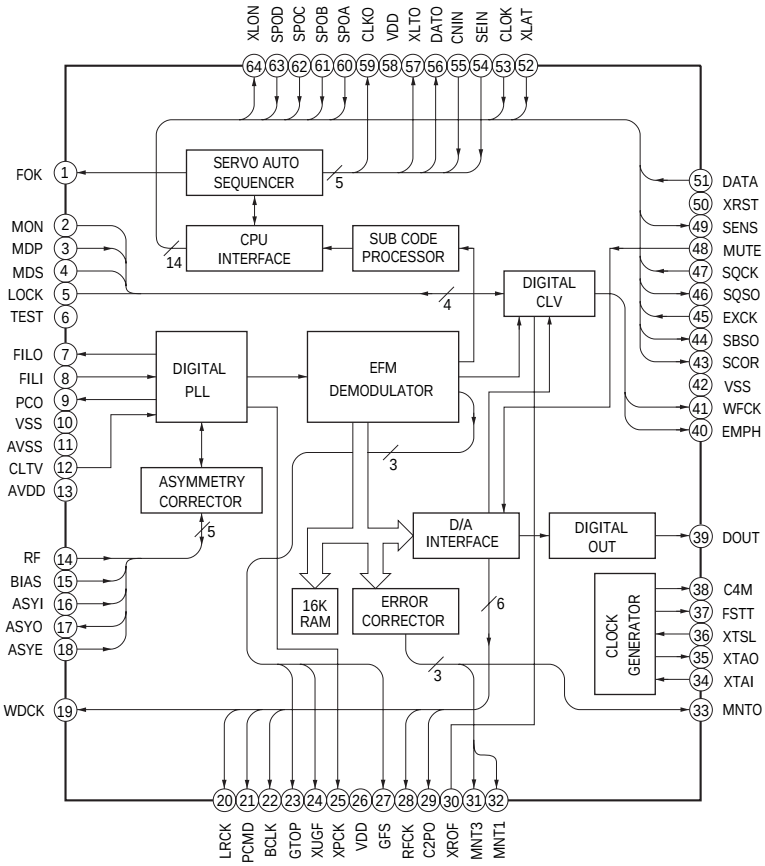

IC3 BA6796FP-T1

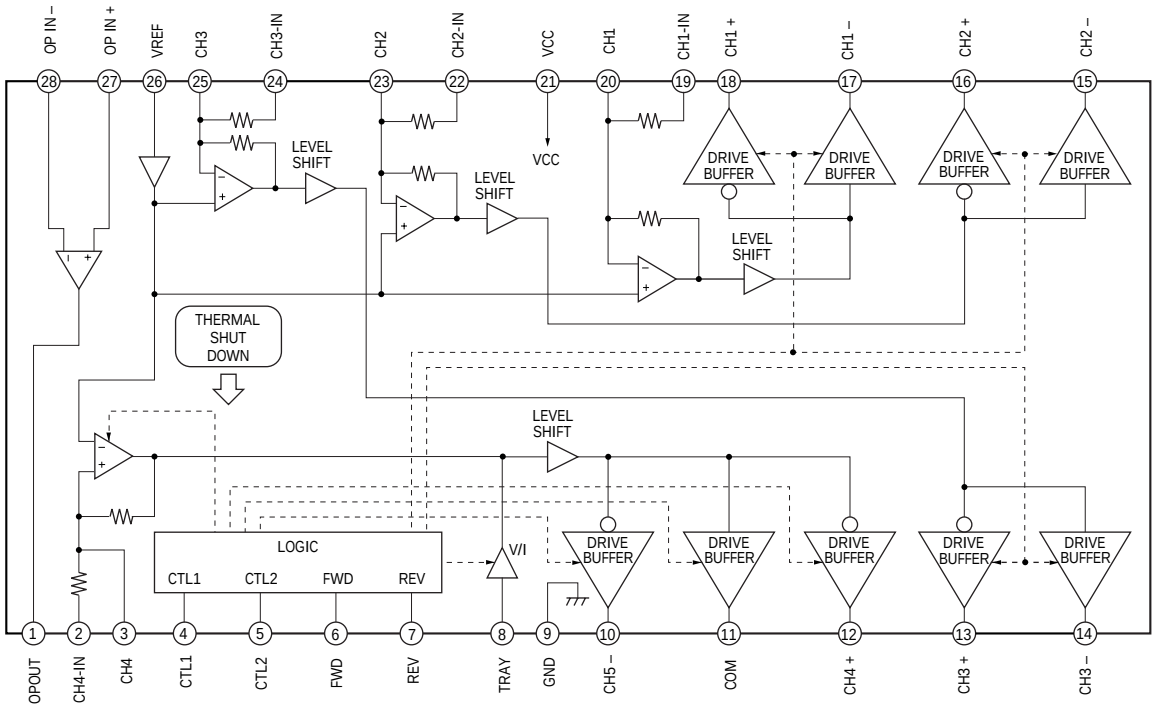

IC2 CXA1782BQ

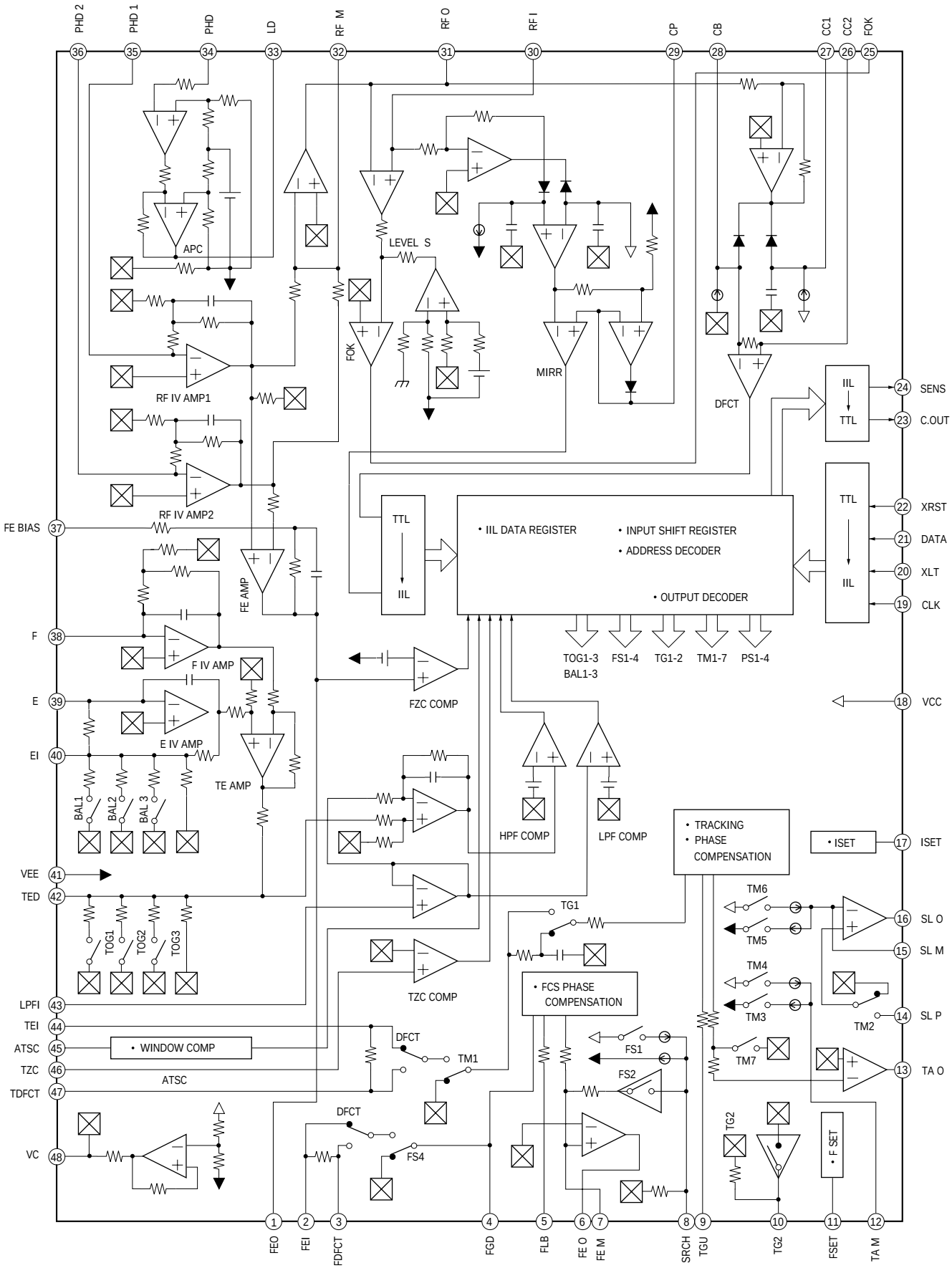

IC401 TDA7462D013TR

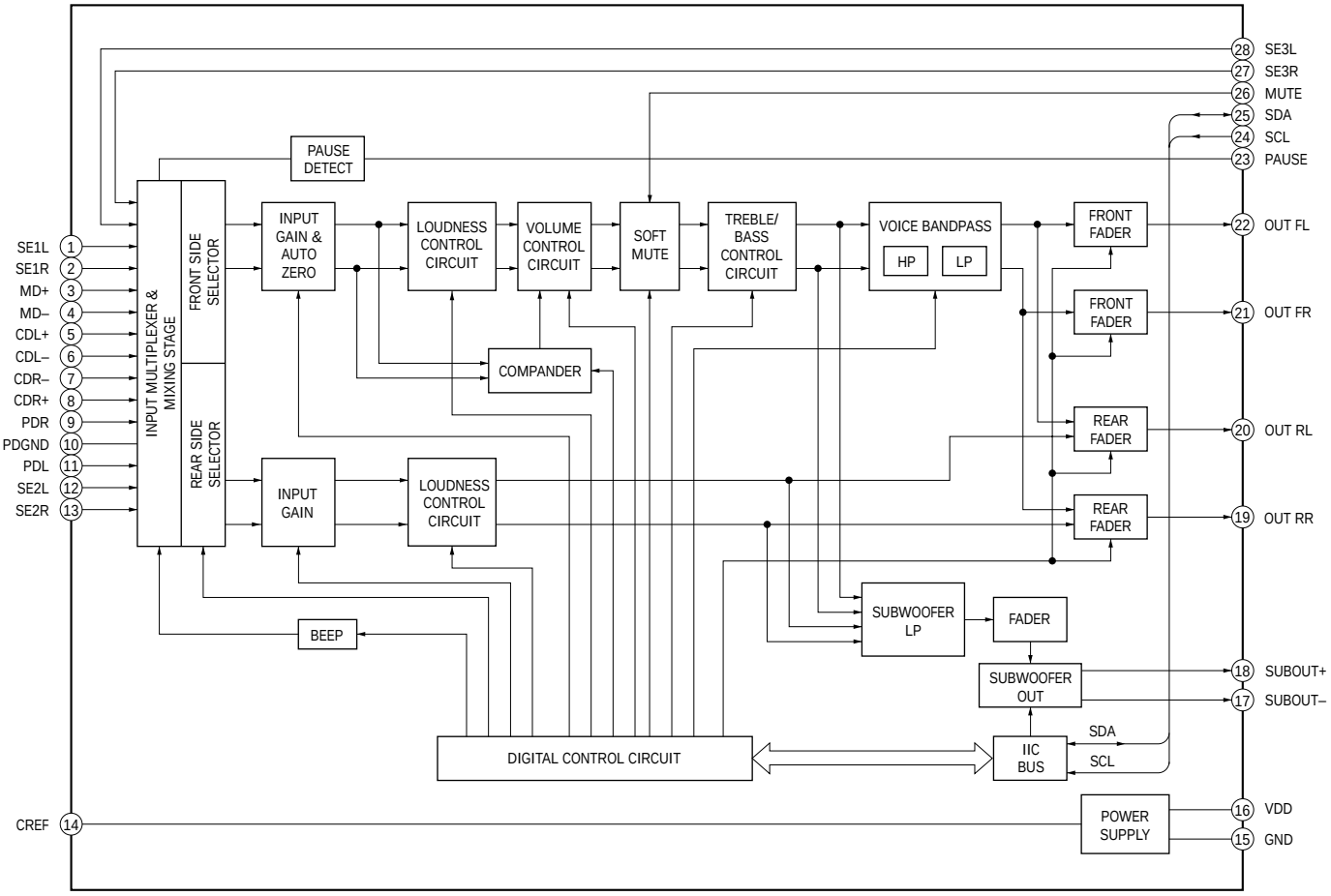

IC702 PCM1717E-ST2

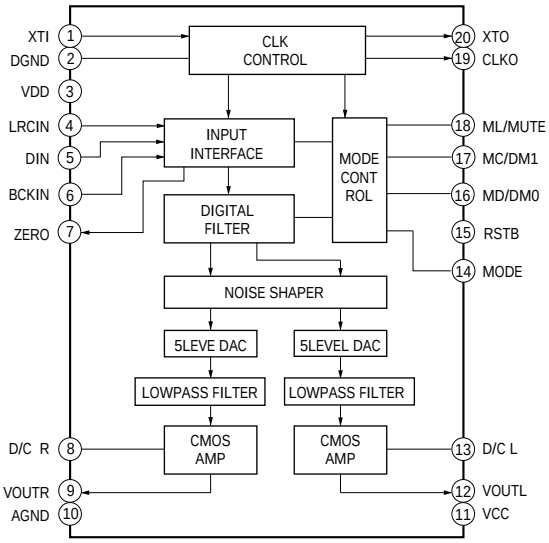

IC601 TDA7427AD1TR

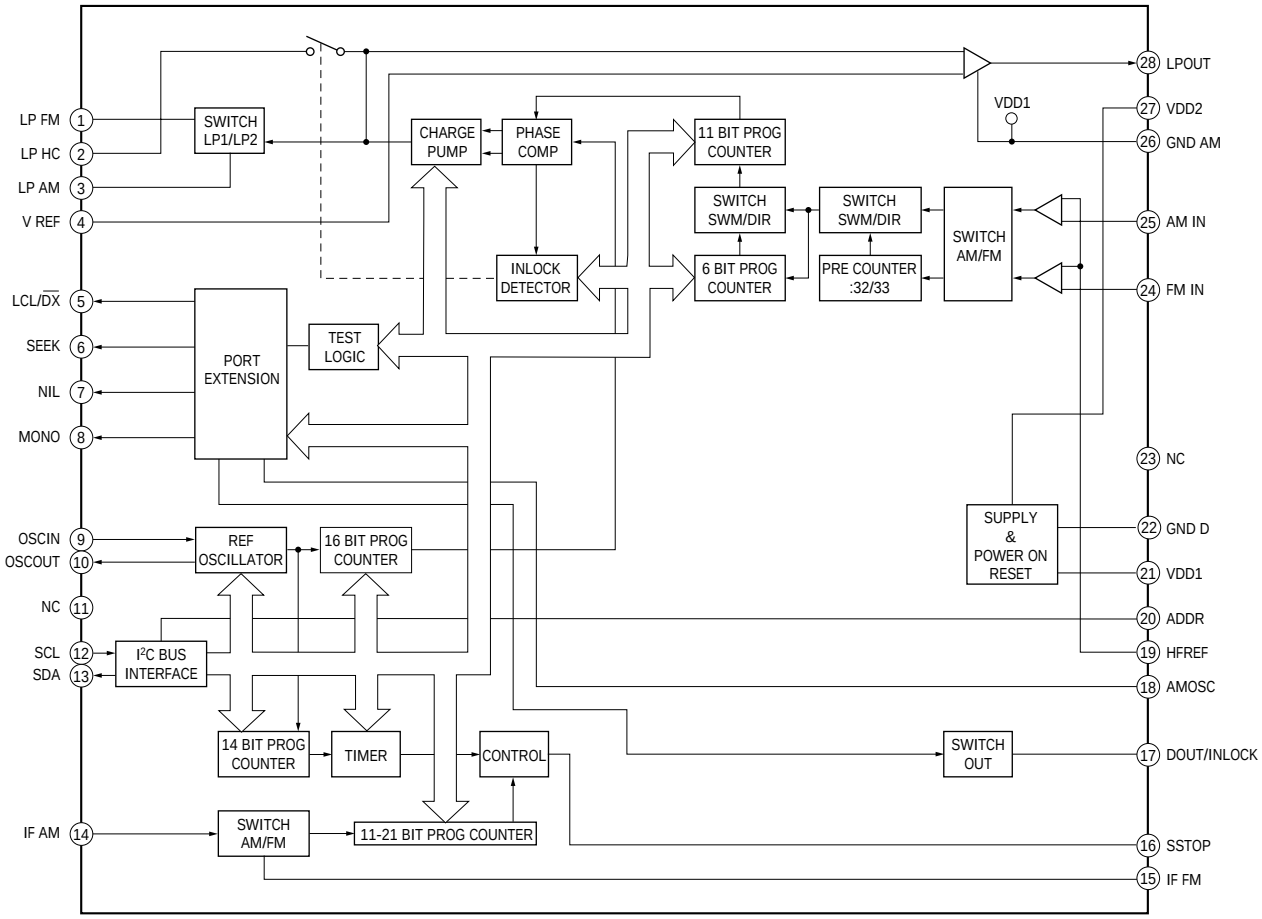

IC602 SAA6588T-118

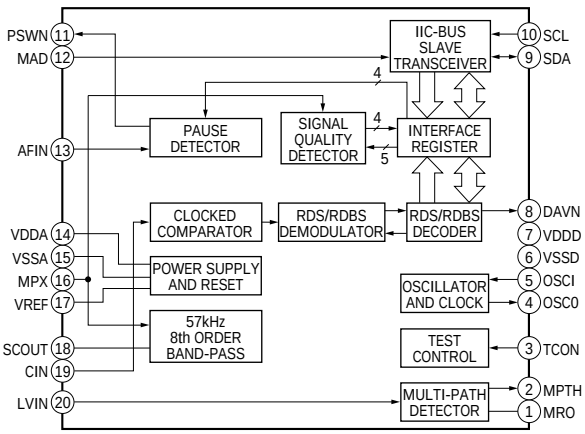

IC901 BA4903ST-V5

